LACAVA

QUADRO

QDO-FF-30

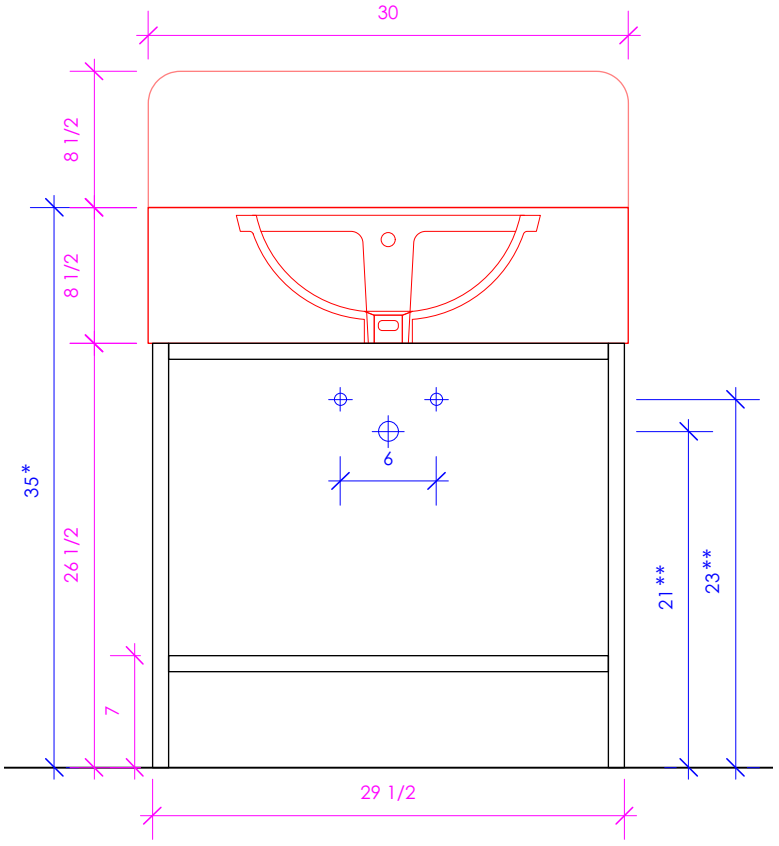

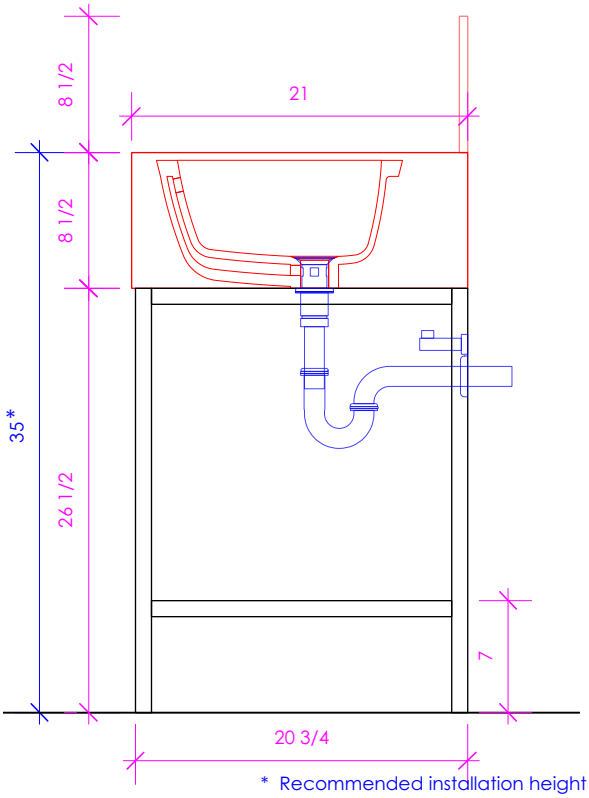

* Recommended installation height
** Recommended plumbing location

FEATURES:

- FLOORSTANDING VANITY
- WELDED METAL FRAME
- ADJUSTABLE LEVELERS
- USED WITH QDO-30T, QDO-30BKS, QDO-30SF
- MOUNTING: PREDRILLED HOLES IN METAL SPANS (SEE FURNITURE MANUAL)
- PROUDLY HANDMADE IN THE USA

FINISHES:

WOOD:

STANDARD:	PREMIUM:	LUXURY:	
02 - NATURAL CHERRY	22 - GRAY ZEBRA	37 - WEATHERED OAK	46 - DRIFTWOOD
07 - NATURAL WALNUT	31 - WHITE OAK	52 - SILVER OAK	*NEWTERRA ONLY*
24 - CLASSIC WALNUT	27 - RUSTIC	50 - HORIZON BLUE	
20 - ASH GRAY	47 - SMOKY WALNUT		
06 - WENGE			
38 - AFRICAN MAHOGANY	08 - MATTE WHITE	85 - GLOSS WHITE	08T1 - WHITE W/ TEXTURE
	35 - MATTE ARDESIA	88 - GLOSS ARDESIA	35T1 - ARDESIA W/ TEXTURE
	54 - MATTE TAUPE	84 - GLOSS TAUPE	54T1 - TAUPE W/ TEXTURE
	16 - MATTE BLACK	86 - GLOSS BLACK	16T1 - BLACK W/ TEXTURE
	42 - MATTE OLIVE GREEN	82 - GLOSS OLIVE GREEN	42T1 - OLIVE GREEN W/TEXTURE
	39 - MATTE SAGE		
	28 - MATTE AZURE		
	29 - MATTE CLOUD		
	40 - MATTE ZEST		

COUNTERTOP: QDO-30T / QDO-30BKS / QDO-30SF

STONE:	QUARTZ:	SOLID SURFACE:	CONCRETE:
WH - BIANCO	PR - PURO	M - SATIN WHITE	SND - SAND
EN - LINAC	AH - ASH	G - POLISHED WHITE	SLT - SLATE
SL - ATHENS		R - MARMO	TER - TERRACOTTA
		V - LAVA	CHL - CHARCOAL
		D - OBSIDIAN	SUN - SUN
			CLY - CLAY
			LIL - LILAC
			MOS - MOSS
2CM OR 3CM BASED ON MARKET AVAILABILITY	2CM OR 3CM BASED ON MARKET AVAILABILITY	1/2" THICKNESS	

METALS:

METAL:
21 - BRUSHED STAINLESS STEEL
10 - POLISHED STAINLESS STEEL

44 - MATTE BLACK
MW - MATTE WHITE
BPW - BRASS POWDER COAT

LACAVA reserves the right to revise any dimension or information on this sheet without notice. Dimensions are nominal and may vary within an industry accepted tolerance of 1/4". Cabinets with 'vanity top' sinks are made to the matching sink and dimensions may vary. LACAVA is not responsible for any cutouts, countertops, or furniture made without the actual product or template. Differences in color, grain, appearance, and texture are inherent in all natural woodwork and should be expected. Variances in these qualities are not deemed manufacturing defects and will not be accepted as valid reasons for return or exchanges. Plumbing specifications are only a guideline and may need alteration based on application.

6630 WEST WRIGHTWOOD
CHICAGO, IL 60707

PH: 773-637-9600
FAX: 773-637-9601

LACAVA.COM
INFO@LACAVA.COM